Cambridge International Examinations
Cambridge International General Certificate of Secondary Education

CHEMISTRY **0620/22**

Paper 2 Multiple Choice (Extended) **May/June 2016**

45 Minutes

Additional Materials: Multiple Choice Answer Sheet
Soft clean eraser
Soft pencil (type B or HB is recommended)

READ THESE INSTRUCTIONS FIRST

Write in soft pencil.
Do not use staples, paper clips, glue or correction fluid.
Write your name, Centre number and candidate number on the Answer Sheet in the spaces provided unless this has been done for you.
DO **NOT** WRITE IN ANY BARCODES.

There are **forty** questions on this paper. Answer **all** questions. For each question there are four possible answers **A**, **B**, **C** and **D**.
Choose the **one** you consider correct and record your choice in **soft pencil** on the separate Answer Sheet.

Read the instructions on the Answer Sheet very carefully.

Each correct answer will score one mark. A mark will not be deducted for a wrong answer.
Any rough working should be done in this booklet.
A copy of the Periodic Table is printed on page 16.
Electronic calculators may be used.

The syllabus is approved for use in England, Wales and Northern Ireland as a Cambridge International Level 1/Level 2 Certificate.

This document consists of **16** printed pages.

© UCLES 2016

1 The particles of a substance gain energy and change from a regular ordered structure to a disordered structure with large distances between the particles.

Which change of state is described?

A boiling

B evaporation

C melting

D sublimation

2 In the chromatography experiment shown, which label represents the solvent front?

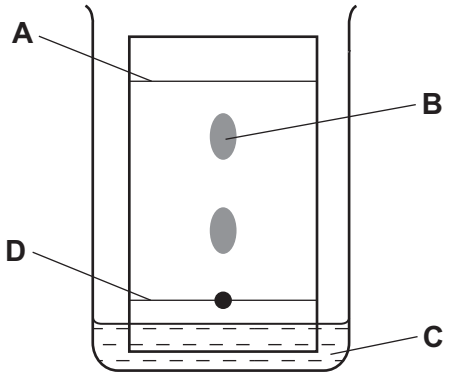

3 X is a mixture of colourless compounds. The diagram shows a chromatogram of X and of three pure compounds, P, Q and R.

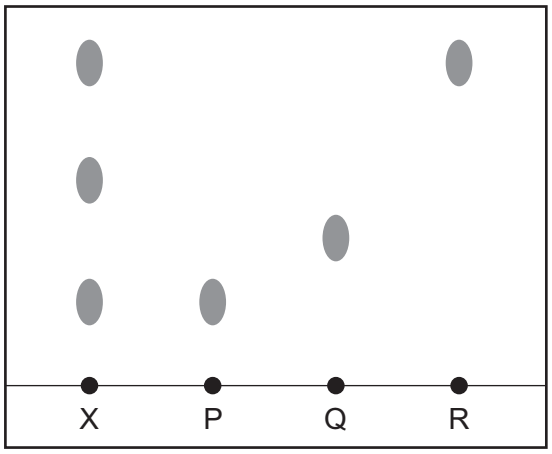

Which statement is **not** correct?

A A locating agent was used to develop the chromatogram of X.

B P and R could be present in X.

C P and R have different solubilities in the solvent.

D Q has a greater R_f value than R.

4 Which statements about isotopes of the same element are correct?

1 They are atoms which have the same chemical properties because they have the same number of electrons in their outer shell.

2 They are atoms which have the same number of electrons and neutrons but different numbers of protons.

3 They are atoms which have the same number of electrons and protons but different numbers of neutrons.

A 1 and 2 **B** 1 and 3 **C** 2 only **D** 3 only

5 The table shows the electronic structure of four atoms.

atom	electronic structure
W	2,8,1
X	2,8,4
Y	2,8,7
Z	2,8,8

Which two atoms combine to form a covalent compound?

A W and X **B** W and Y **C** X and Y **D** X and Z

6 Which statement describes the attractive forces between molecules (intermolecular forces)?

A They are strong covalent bonds which hold molecules together.

B They are strong ionic bonds which hold molecules together.

C They are weak forces formed between covalently-bonded molecules.

D They are weak forces which hold ions together in a lattice.

7 Metals consist of a lattice of positive ions in a ‘sea of electrons’.

Why is aluminium malleable?

A Its ions are attracted to the ‘sea of electrons’.

B Its ions are tightly packed together.

C Its ions repel each other.

D Its layers of ions can slide over each other.

8 A sample of 16.0 g of a metal oxide, MO, is reduced to 12.8 g of the metal, M.

What is the relative atomic mass, A_r, of M?

A 32 **B** 64 **C** 80 **D** 128

9 The equation for the reaction between calcium carbonate and hydrochloric acid is shown.

$$CaCO_3(s) + 2HCl(aq) \rightarrow CaCl_2(aq) + H_2O(l) + CO_2(g)$$

How many moles of calcium carbonate will give 24 cm^3 of carbon dioxide when reacted with an excess of the acid?

A 1 mol **B** 0.1 mol **C** 0.01 mol **D** 0.001 mol

10 The diagram shows the electrolysis of molten zinc chloride, $ZnCl_2$.

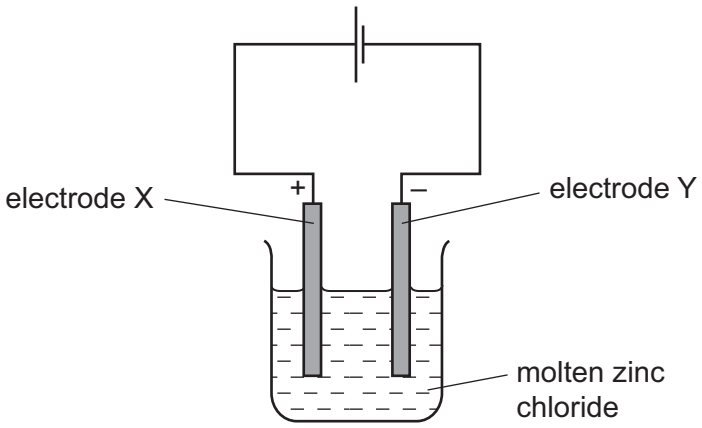

Which statement is correct?

A Oxidation occurs at electrode X and the equation is: $2Cl^- \rightarrow Cl_2 + 2e^-$.

B Oxidation occurs at electrode Y and the equation is: $Zn^{2+} + 2e^- \rightarrow Zn$.

C Reduction occurs at electrode X and the equation is: $Zn^{2+} + 2e^- \rightarrow Zn$.

D Reduction occurs at electrode Y and the equation is: $2Cl^- \rightarrow Cl_2 + 2e^-$.

11 The diagram shows some properties that substances may have.

To which labelled part of the diagram does ^{235}U belong?

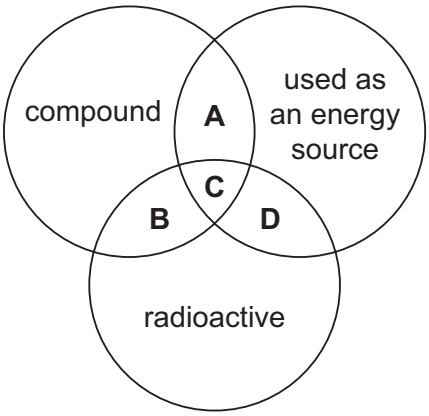

12 The diagram shows a simple cell.

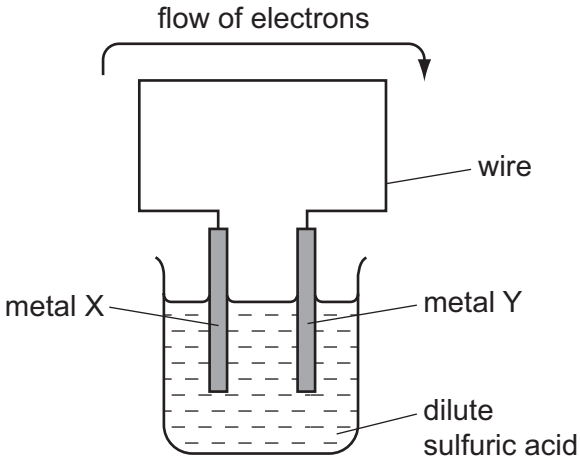

For which pair of metals would electrons flow from metal X to metal Y?

	X	Y
A	copper	iron
B	copper	zinc
C	iron	zinc
D	zinc	iron

13 The energy level diagram for the combustion of methane is shown.

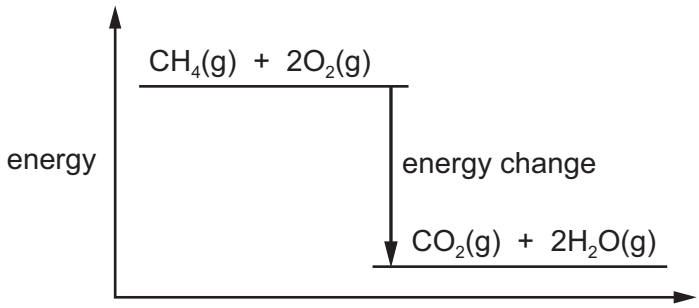

Which row gives the equation and energy change for this reaction?

	equation	energy change in kJ / mol
A	$CH_4(g) + 2O_2(g) \rightarrow CO_2(g) + 2H_2O(g)$	+891
B	$CH_4(g) + 2O_2(g) \rightarrow CO_2(g) + 2H_2O(g)$	–891
C	$CH_4(g) + 2O_2(g) \rightarrow CO_2(g) + 2H_2O(l)$	+891
D	$CH_4(g) + 2O_2(g) \rightarrow CO_2(g) + 2H_2O(l)$	–891

© UCLES 2016

14 A liquid X reacts with solid Y to form a gas.

Which two diagrams show suitable methods for investigating the rate (speed) of the reaction?

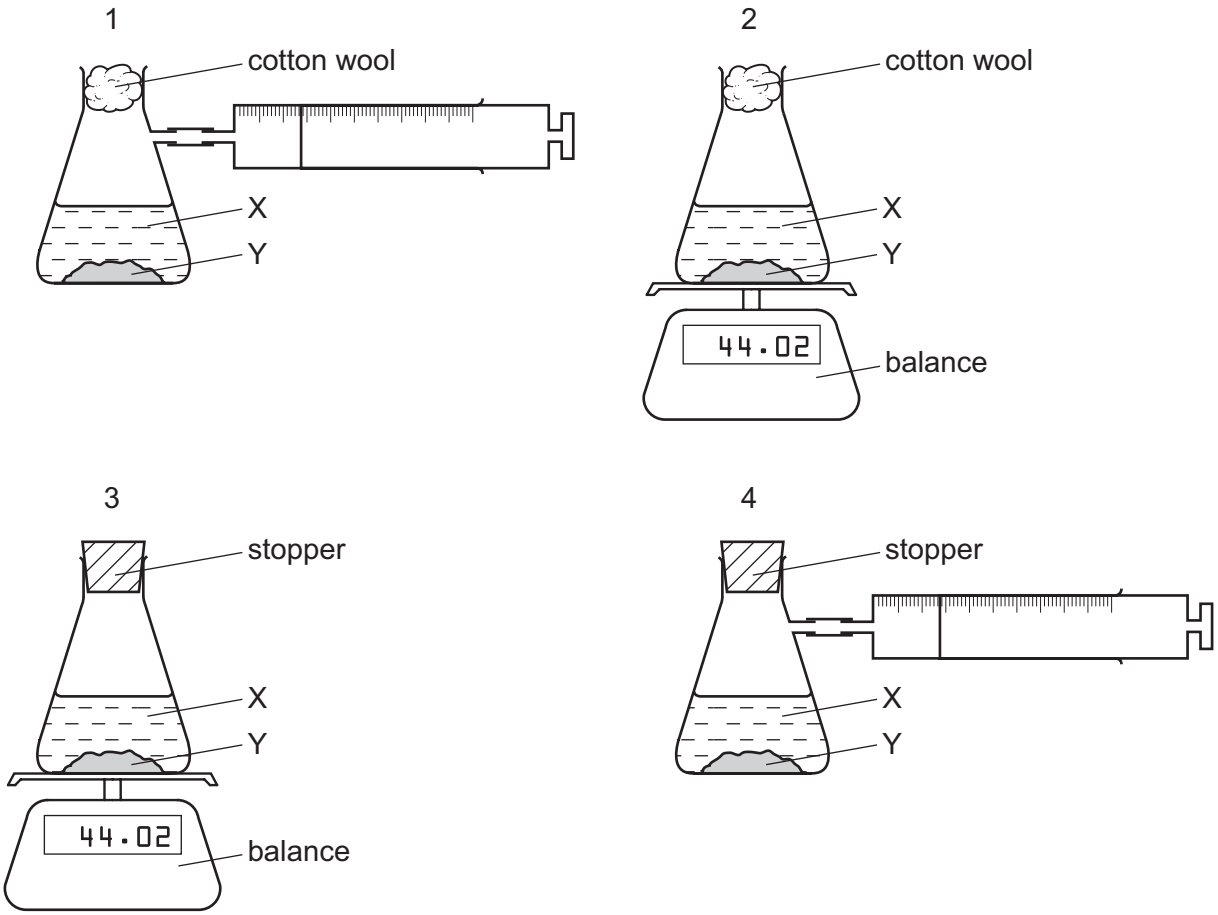

A 1 and 3 **B** 1 and 4 **C** 2 and 3 **D** 2 and 4

15 Which row describes how the energy of collision between particles changes when concentration and temperature are increased?

	concentration	temperature
A	increases	increases
B	increases	no change
C	no change	increases
D	no change	no change

16 Methanol is made by reacting carbon monoxide with hydrogen.

The reaction is exothermic and is a chemical equilibrium.

The equation for the reaction is shown.

$$CO(g) + 2H_2(g) \rightleftharpoons CH_3OH(g)$$

Which changes in temperature and pressure increase the yield of methanol?

	temperature	pressure
A	decrease	decrease
B	decrease	increase
C	increase	decrease
D	increase	increase

17 Which equation represents a reduction reaction?

A $Fe^{2+} + e^- \rightarrow Fe^{3+}$

B $Fe^{2+} \rightarrow Fe^{3+} + e^-$

C $Fe^{3+} + e^- \rightarrow Fe^{2+}$

D $Fe^{3+} \rightarrow Fe^{2+} + e^-$

18 Which statements are properties of an acid?

1 reacts with ammonium sulfate to form ammonia

2 turns red litmus blue

	1	2
A	✓	✓
B	✓	✗
C	✗	✓
D	✗	✗

19 Which row describes whether an amphoteric oxide reacts with acids and bases?

	reacts with acids	reacts with bases
A	no	no
B	no	yes
C	yes	no
D	yes	yes

20 Silver chloride is insoluble in water and is prepared by precipitation.

Which two substances can be used to make silver chloride?

A barium chloride and silver nitrate

B hydrochloric acid and silver

C hydrochloric acid and silver bromide

D sodium chloride and silver iodide

21 Where in the Periodic Table is the metallic character of the elements greatest?

	left or right side of a period	at the top or bottom of a group
A	left	bottom
B	left	top
C	right	bottom
D	right	top

22 Rubidium is a Group I metal.

Which statement about rubidium is **not** correct?

A It has a higher melting point than lithium.

B It has one electron in its outer shell.

C It reacts vigorously with water.

D It reacts with chlorine to form rubidium chloride, RbC*l*.

23 The table gives information about four elements, P, Q, R and S.

	melting point in °C	electrical conductivity of element when solid	density in g / cm^3	colour of iodide of element
P	98	good	0.97	white
Q	–39	good	13.53	red
R	1410	poor	2.33	colourless
S	1535	good	7.87	green

Which elements could be transition elements?

A P, Q and S **B** Q and S only **C** R and S only **D** S only

24 Part of the Periodic Table is shown.

Which element is a gas that does **not** form a compound with potassium?

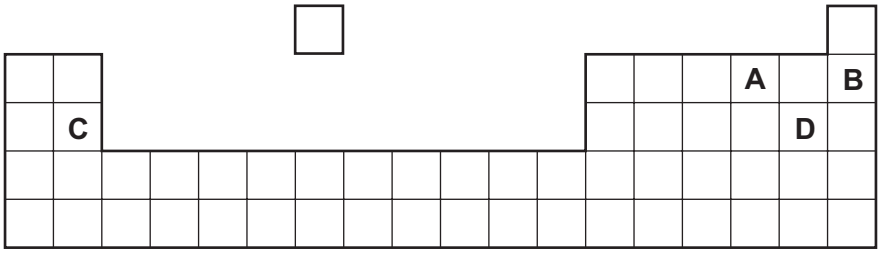

25 Some magnesium compounds undergo thermal decomposition.

What are the products of thermal decomposition of magnesium nitrate, $Mg(NO_3)_2$, and magnesium hydroxide, $Mg(OH)_2$?

	$Mg(NO_3)_2$	$Mg(OH)_2$
A	MgO, NO_2 and O_2	MgO and H_2O
B	MgO, NO_2 and O_2	MgO and H_2
C	$Mg(NO_2)_2$ and O_2	MgO and H_2O
D	$Mg(NO_2)_2$ and O_2	MgO and H_2

26 Which property is **not** considered a typical metallic property?

A good conductor of heat

B low melting point

C malleable (can be hammered into shape)

D strong

27 Iron from a blast furnace is treated with oxygen and with calcium oxide to make steel.

Which substances in the iron are removed?

	oxygen removes	calcium oxide removes
A	carbon	acidic oxides
B	carbon	basic oxides
C	iron	acidic oxides
D	iron	basic oxides

28 Why is cryolite used during the extraction of aluminium by electrolysis?

A It is a catalyst for the reaction.

B It lowers the melting point of the electrolyte.

C It protects the anodes.

D It separates the aluminium from the electrolyte.

29 The diagram shows an experiment to investigate how paint affects the rusting of iron.

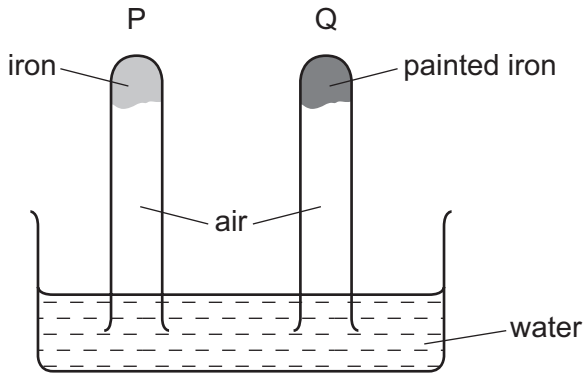

What happens to the water level in tubes P and Q?

	tube P	tube Q
A	falls	rises
B	no change	rises
C	rises	falls
D	rises	no change

30 A new planet has been discovered and its atmosphere has been analysed.

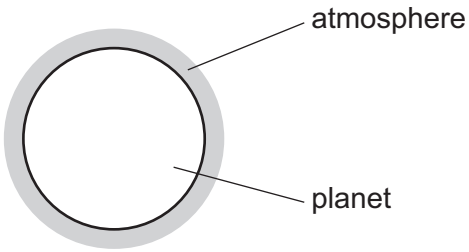

The table shows the composition of its atmosphere.

gas	percentage by volume
carbon dioxide	4
nitrogen	72
oxygen	24

Which gases are present in the atmosphere of the planet in a higher percentage than they are in the Earth's atmosphere?

A carbon dioxide and oxygen

B carbon dioxide only

C nitrogen and oxygen

D nitrogen only

31 The gases coming from a car's engine contain oxides of nitrogen.

How are these oxides formed?

A Nitrogen reacts with carbon dioxide.

B Nitrogen reacts with carbon monoxide.

C Nitrogen reacts with oxygen.

D Nitrogen reacts with petrol.

© UCLES 2016

32 Ammonia is manufactured by a reversible reaction.

$$N_2(g) + 3H_2(g) \rightleftharpoons 2NH_3(g)$$

The forward reaction is exothermic.

What is the effect of increasing the pressure on the percentage yield and rate of formation of ammonia?

	percentage yield	rate of formation
A	decreases	decreases
B	decreases	increases
C	increases	decreases
D	increases	increases

33 The Contact process is used for the manufacture of sulfuric acid.

Which statement about this process is **not** correct?

A A catalyst of iron is used.

B Oxygen from the air is used to react with sulfur dioxide.

C Sulfur trioxide dissolves in sulfuric acid to form oleum.

D The temperature used is around 450 °C.

34 Lime (calcium oxide) is used to treat waste water from a factory.

Which substance is removed by the lime?

A ammonia

B sodium chloride

C sodium hydroxide

D sulfuric acid

35 The diagram shows the separation of petroleum into fractions.

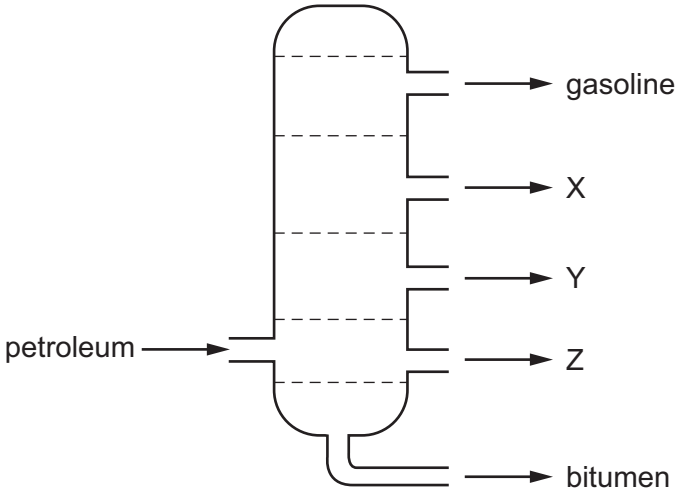

What could X, Y and Z represent?

	X	Y	Z
A	diesel oil	lubricating fraction	paraffin
B	lubricating fraction	diesel oil	paraffin
C	paraffin	lubricating fraction	diesel oil
D	paraffin	diesel oil	lubricating fraction

36 Which compound is **not** an alkane, C_nH_{2n+2}?

A $CH_3CH_2CH_2CH_3$

B $(CH_3)_2CHCH_3$

C $CH_3CHCHCH_3$

D $(CH_3)_3CH$

37 An ester is formed when a carboxylic acid reacts with an alcohol.

Which ester is formed when propanoic acid and ethanol react?

A $CH_3CO_2CH_2CH_3$

B $CH_3CO_2CH_2CH_2CH_3$

C $CH_3CH_2CO_2CH_3$

D $CH_3CH_2CO_2CH_2CH_3$

© UCLES 2016

38 What is an advantage of producing ethanol by fermentation of sugar compared to the catalytic addition of steam to ethene?

A The alcohol produced is purer.

B The process is faster.

C The process uses high temperature.

D The process uses renewable raw materials.

39 In which row are the monomer and polymer chain correctly matched?

	monomer	part of the polymer chain
A	$CH_3CH{=}CHCH_3$	$–CH(CH_3)–CH(CH_3)–CH(CH_3)–CH(CH_3)–$
B	$CH_2{=}CHCl$	$–CHCl–CHCl–CHCl–CHCl–$
C	$CH_3CH{=}CH_2$	$–CH_3–CH–CH_2–CH_3–CH–CH_2–$
D	$CH_2{=}CHCH_2CH_3$	$–CH_2–CH_2–CH_2–CH(CH_2CH_3)–$

40 Which two polymers have the same linkages bonding the monomers together?

A nylon and complex carbohydrate

B nylon and protein

C *Terylene* and complex carbohydrate

D *Terylene* and protein

Permission to reproduce items where third-party owned material protected by copyright is included has been sought and cleared where possible. Every reasonable effort has been made by the publisher (UCLES) to trace copyright holders, but if any items requiring clearance have unwittingly been included, the publisher will be pleased to make amends at the earliest possible opportunity.

To avoid the issue of disclosure of answer-related information to candidates, all copyright acknowledgements are reproduced online in the Cambridge International Examinations Copyright Acknowledgements Booklet. This is produced for each series of examinations and is freely available to download at www.cie.org.uk after the live examination series.

Cambridge International Examinations is part of the Cambridge Assessment Group. Cambridge Assessment is the brand name of University of Cambridge Local Examinations Syndicate (UCLES), which is itself a department of the University of Cambridge.

© UCLES 2016

The Periodic Table of Elements

Key

atomic number
atomic symbol
name
relative atomic mass

Group																	
I	II											III	IV	V	VI	VII	VIII
							1 **H** hydrogen 1										2 **He** helium 4
3 **Li** lithium 7	4 **Be** beryllium 9											5 **B** boron 11	6 **C** carbon 12	7 **N** nitrogen 14	8 **O** oxygen 16	9 **F** fluorine 19	10 **Ne** neon 20
11 **Na** sodium 23	12 **Mg** magnesium 24											13 **Al** aluminium 27	14 **Si** silicon 28	15 **P** phosphorus 31	16 **S** sulfur 32	17 **Cl** chlorine 35.5	18 **Ar** argon 40
19 **K** potassium 39	20 **Ca** calcium 40	21 **Sc** scandium 45	22 **Ti** titanium 48	23 **V** vanadium 51	24 **Cr** chromium 52	25 **Mn** manganese 55	26 **Fe** iron 56	27 **Co** cobalt 59	28 **Ni** nickel 59	29 **Cu** copper 64	30 **Zn** zinc 65	31 **Ga** gallium 70	32 **Ge** germanium 73	33 **As** arsenic 75	34 **Se** selenium 79	35 **Br** bromine 80	36 **Kr** krypton 84
37 **Rb** rubidium 85	38 **Sr** strontium 88	39 **Y** yttrium 89	40 **Zr** zirconium 91	41 **Nb** niobium 93	42 **Mo** molybdenum 96	43 **Tc** technetium –	44 **Ru** ruthenium 101	45 **Rh** rhodium 103	46 **Pd** palladium 106	47 **Ag** silver 108	48 **Cd** cadmium 112	49 **In** indium 115	50 **Sn** tin 119	51 **Sb** antimony 122	52 **Te** tellurium 128	53 **I** iodine 127	54 **Xe** xenon 131
55 **Cs** caesium 133	56 **Ba** barium 137	57–71 lanthanoids	72 **Hf** hafnium 178	73 **Ta** tantalum 181	74 **W** tungsten 184	75 **Re** rhenium 186	76 **Os** osmium 190	77 **Ir** iridium 192	78 **Pt** platinum 195	79 **Au** gold 197	80 **Hg** mercury 201	81 **Tl** thallium 204	82 **Pb** lead 207	83 **Bi** bismuth 209	84 **Po** polonium –	85 **At** astatine –	86 **Rn** radon –
87 **Fr** francium –	88 **Ra** radium –	89–103 actinoids	104 **Rf** rutherfordium –	105 **Db** dubnium –	106 **Sg** seaborgium –	107 **Bh** bohrium –	108 **Hs** hassium –	109 **Mt** meitnerium –	110 **Ds** darmstadtium –	111 **Rg** roentgenium –	112 **Cn** copernicium –		114 **Fl** flerovium –		116 **Lv** livermorium –		

lanthanoids	57 **La** lanthanum 139	58 **Ce** cerium 140	59 **Pr** praseodymium 141	60 **Nd** neodymium 144	61 **Pm** promethium –	62 **Sm** samarium 150	63 **Eu** europium 152	64 **Gd** gadolinium 157	65 **Tb** terbium 159	66 **Dy** dysprosium 163	67 **Ho** holmium 165	68 **Er** erbium 167	69 **Tm** thulium 169	70 **Yb** ytterbium 173	71 **Lu** lutetium 175
actinoids	89 **Ac** actinium –	90 **Th** thorium 232	91 **Pa** protactinium 231	92 **U** uranium 238	93 **Np** neptunium –	94 **Pu** plutonium –	95 **Am** americium –	96 **Cm** curium –	97 **Bk** berkelium –	98 **Cf** californium –	99 **Es** einsteinium –	100 **Fm** fermium –	101 **Md** mendelevium –	102 **No** nobelium –	103 **Lr** lawrencium –

The volume of one mole of any gas is 24 dm^3 at room temperature and pressure (r.t.p.)

© UCLES 2016